FIRST ANGLE PROJECTION

(ALL DIMENSIONS ARE IN mm)

DRG. NO. 0 445 43 64 051

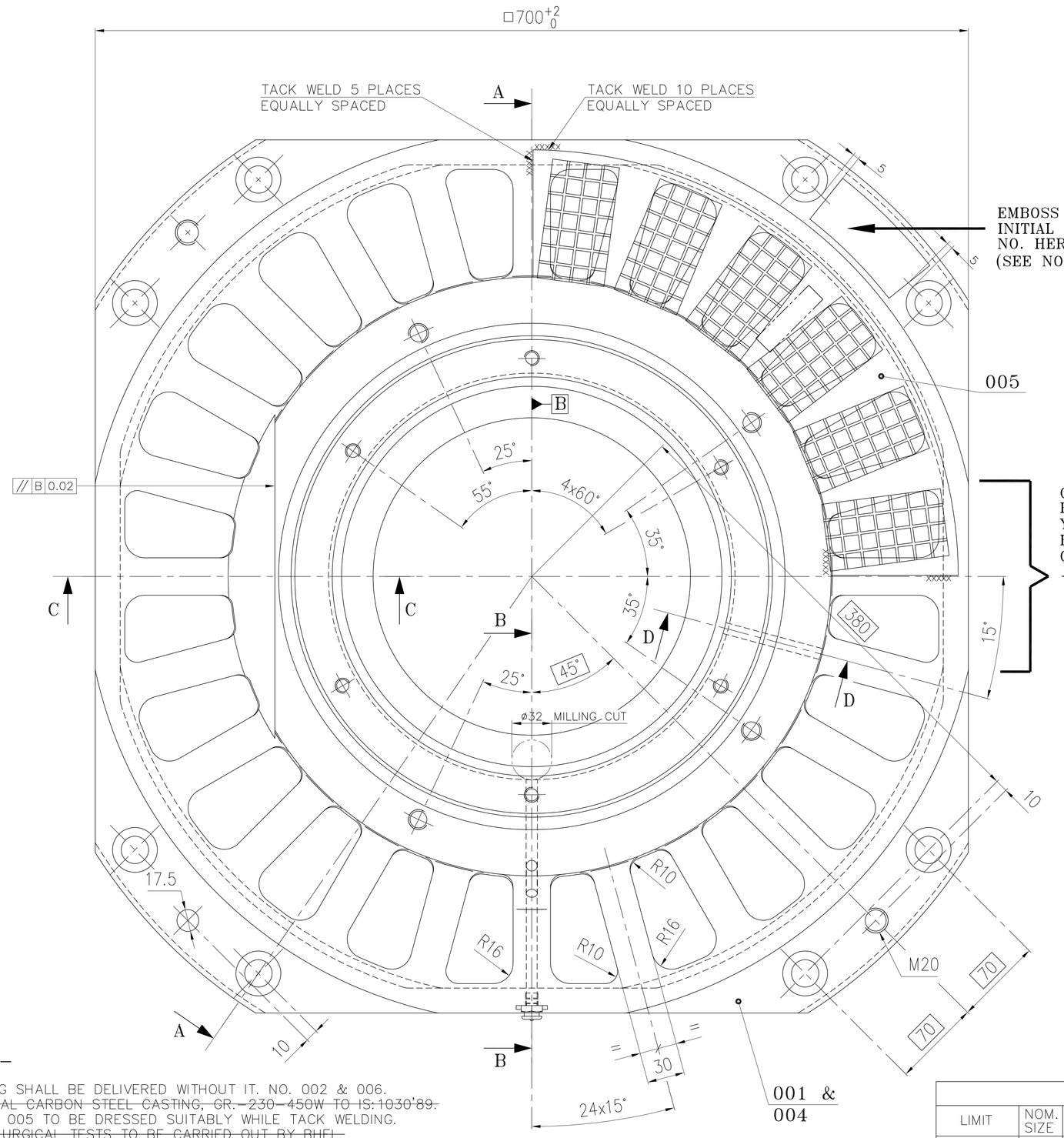

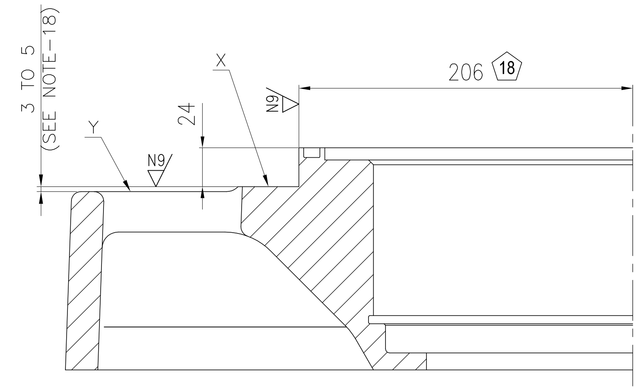

SECTION C-C

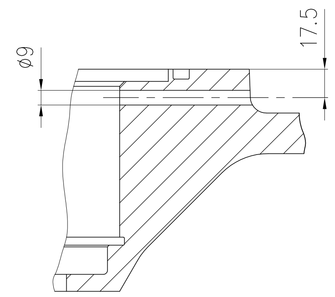

SECTION D-D

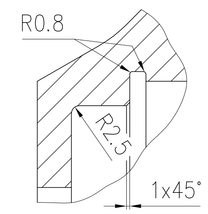

Z

SCALE-1:1

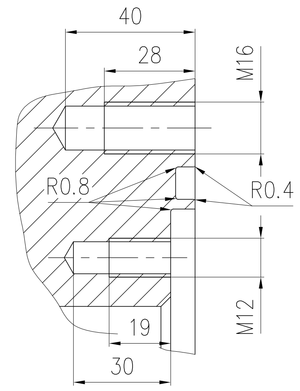

P

SCALE-1:1

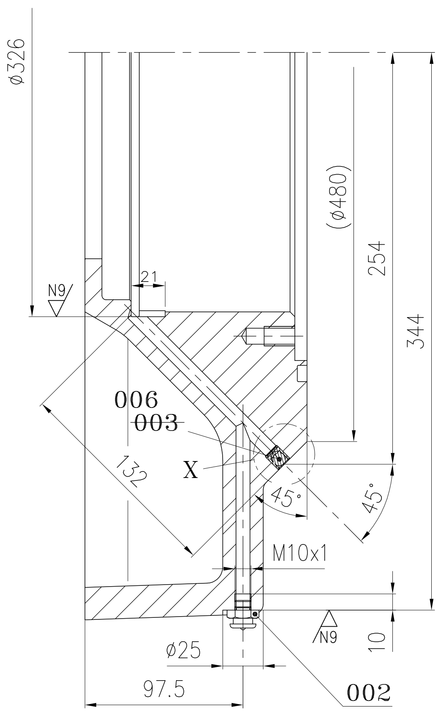

SECTION B-B

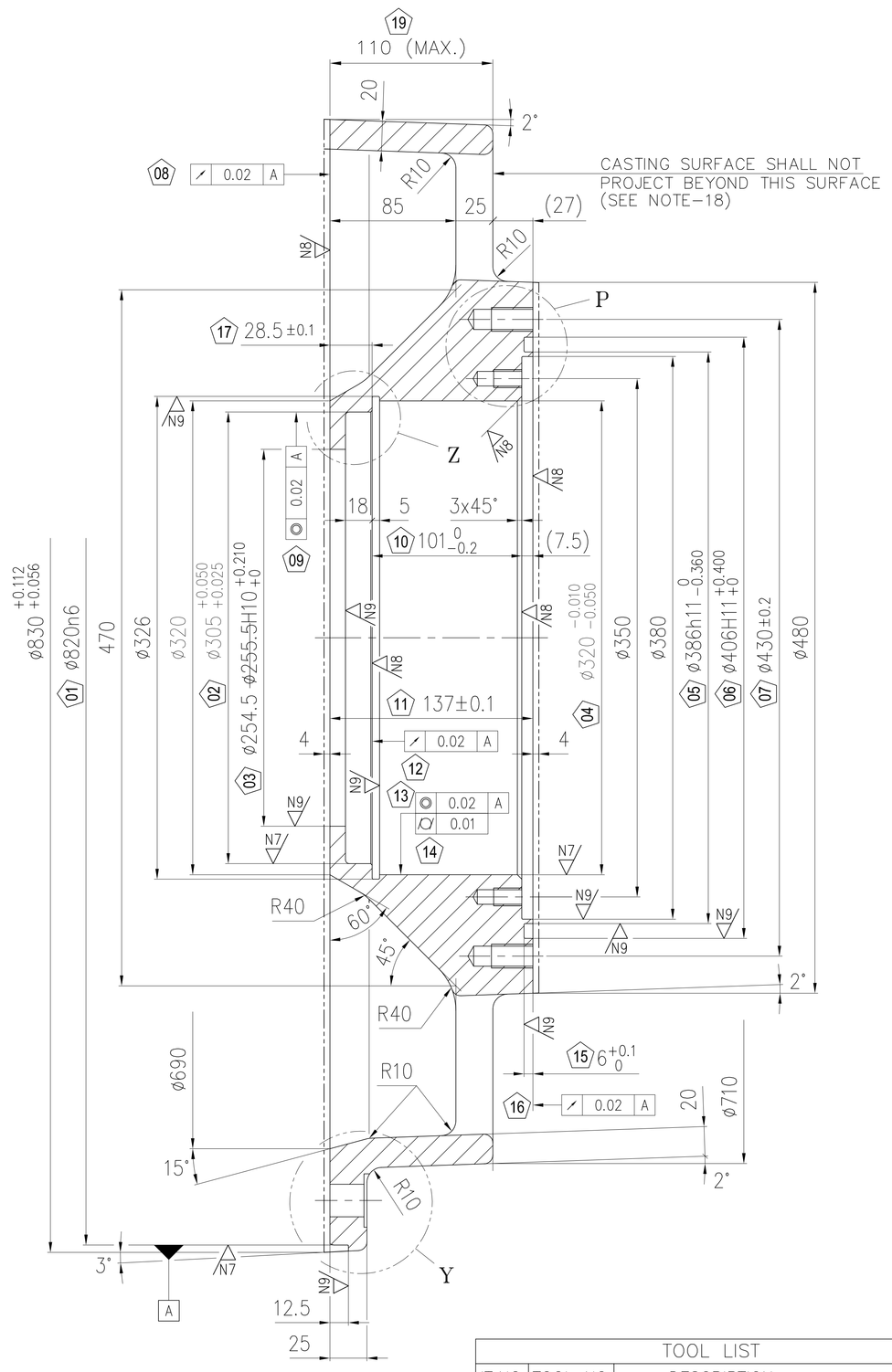

SECTION A-A

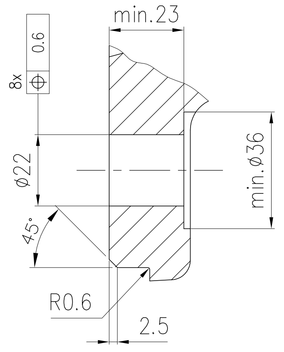

Y

SCALE-1:1

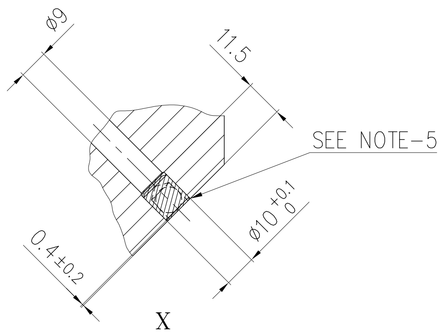

X

SCALE-1:1

NOTES:-

1. CASTING SHALL BE DELIVERED WITHOUT IT. NO. 002 & 006.
2. ~~MATERIAL CARBON STEEL CASTING, GR.-230-450W TO IS:1030'89.~~
3. IT. NO. 005 TO BE DRESSED SUITABLY WHILE TACK WELDING.
4. ~~METALLURGICAL TESTS TO BE CARRIED OUT BY BHEL.~~
5. IT. NO. 003 i.e. EXPANDING DOWEL DELETED, IN LIEU OF, A PIN SIZE : ø10x11.5 LG. TO BE PLUGGED & WELDED AT LOCATION MARKED AS "X".
6. ~~MATERIAL:- SPHEROIDAL GRAPHITE CAST IRON (SGCI) TO DIN -1693 PART-1, GR.-666-40 OR GR.-400/18 OF IS:1865-1991/ (LATEST VERSION).~~
7. FIRM SHOULD HAVE THEIR OWN FOUNDRY DULY APPROVED BY RDSO AS CLASS-A FOUNDRY FOR CASTING THE RAW MATERIAL OF SPECIFIED GRADE SGCI CASTING FOR ITEM END FRAME/DE & NDE OR THEY HAVE TO SUBMIT ADEQUATE DOCUMENTARY EVIDENCE REGARDING SOURCE OF RAW MATERIAL (CASTING) FROM RDSO APPROVED CLASS-A FOUNDRY ONLY.
8. ALL 19 NOS. "⬠" MARKED DIMENSION ARE CRITICAL TO QUALITY (CTQ) & SL. NO. OF CTQ DIMENSION ARE INSCRIBED IN ⬠ e.g.(19).
9. EMBOSSING & PUNCHING TO BE DONE AT THE SHOWN LOCATION BY CASTING SUPPLIER. SIZE OF EMBOSSING/PUNCHING TO BE 5-20mm. EMBOSSING & PUNCHING SHOULD NOT BE MACHINED/DAMAGED DURING MACHINING AND SHALL BE RETAINED.
10. SURFACE FINISH OF UNMACHINED CASTED SURFACE TO BE AS PER IS3073 (IN CASE MACHINING ALL OVER IS NOT MENTIONED OR SOME SURFACES ARE NOT INDICATED FOR MACHINING BY SYMBOL.)
11. MACHINING ALLOWANCE ON EACH TOOL POINT TO BE 5-7 MM IN CASE CASTING IS SUPPLIED OR 3-5 MM IN CASE ROUGH MACHINED CASTING IS SUPPLIED.
12. FOR OTHER QUALITY REQUIREMENT WHICH ARE NOT CALLED IN DRAWING SPECIFICATION TM12545 TO BE REFERRED.
13. QAP FOR CASTING TO BE AS PER QTM/QAP/VENDOR/13-14/001 (LATEST REV.).
14. ADDITIONAL MATERIAL SHALL NOT BE PROVIDED ON SURFACES WHERE MACHINING SYMBOL IS NOT INDICATED. TOLERANCES ON UNTOLERATED CASTING SURFACES SHALL BE AS PER IS: 4897, CLASS-2.
15. ~~DIMENSIONS TO BE CHECKED ON SAMPLE BASIS. QUANTUM OF INSPECTION SHALL BE AS GIVEN BELOW (AT LEAST ONE NUMBER).~~

SL.NO.	CHECKING PARAMETER		BHEL Q.C.
001	CTQ DIMS.	DIMENSIONAL TOLERANCE	20%
		GEOMETRICAL TOLERANCE	20%
002	REMAINING DIMS.		5%

16. COMPONENT TO BE PRIMER PAINTED WITH INORGANIC ETHYL ZINC SILICATE PRIMER (AA56113) AS PER SCHEME NO. 8 OF TABLE-II(a) OF SPECIFICATION AA0674123 (PAGE NO. 22 OF 30).
17. AFTER FINISH MACHINING PAINT INTERNAL SURFACE WITH INSULATING ENAMEL PAINT BP27595/ CIT064 TO PROCESS SPEC. TM94217, CL.5.
18. ROUGH M/CD. CASTING SUPPLIER TO ENSURE 3 TO 5 MM DEPTH BETWEEN X & Y FACE, i.e. IF 4 MM. MACHINING ALLOWANCE IS KEPT ON 'X' FACE. THEN OVER ALL DEPTH FROM X TO Y FACE IN ROUGH M/CD. CASTING SHALL BE 4+(3 TO 5) MM.
19. GREASE HOLE DIA. 9MM TO BE THOROUGHLY CLEANED & FREE FROM CHIPS. SAME IS TO BE ENSURED BY CHECKING WITH A STEEL BAR OF DIA. 8 MM AND MINIUMUM 505 MM LENGTH.
20. ALL MACHINED/ R.MACHINED SURFACES TO BE PROTECTED WITH TRP.

GAUGE LIST				
LIMIT	NOM. SIZE	TOOL NO.	IT.NO.	SYM.
~~320 -0.050 -0.067~~	~~–~~	~~1577826~~	~~001~~	~~PIN~~
101 -0.2 0	–	1577827	001	DEPTH
137±0.1	–	1577829	001	LENGTH
305 +0.050 +0.025	–	1577830	001	PIN
700 +2 0	–	1577835	001	CAL.
820 -0.112 -0.056	–	1577871	001	CAL.
255.5 +0.210 +0	–	1578215	001	PIN
320 -0.010 -0.050	–	1605055	001	PIN
28.5±0.1	–	1605061	001	FABRICATED DEPTH GAUGE

TOOL LIST		
IT.NO.	TOOL NO.	DESCRIPTION
001	1577825	GROOVE CKG GAUGE 10x6+0.1 DEEP
001	1577831	STEP GAUGE 12.5MM
001	1577833	DRILL JIG FOR 45° HOLE
001	1577834	DRILL JIG FOR HOLE IN SECTION-'DD'
001	1577836	DRILL JIG FOR REMAINING HOLES
001	1577873	GRINDING FIX WITH POT CHUCK
001	1578081	ANGLE PLATE FOR DRILLING 30° HOLE

QTY VAR 00	REMARKS	VAR. NO.	ITEM NO.	DESCRIPTION	DRAWING NO.	IT.NO.	MATL. CODE	MATL. SPCN.	A/C	UNIT WT.	QTY.	STD	SCALE
001			006	PIN, ø10x11.5 LG.			IS:2062'99,GR.B						
004			005	AIR OUTLET NET	24454364051		SH. TO IS:10790R,FE 330ORIS:513,GR.D						
001			004	END FRAME (DE) (MACHD.)			TM-11491		KG	120.00			
~~001~~			~~003~~	~~EXPANDING DOWEL ø10~~	~~44454464054~~								
001			002	LUBRICATING NIPPLE 21 M10x1	44454364054								
001	RAW WT. 143.00 KG.		001	END FRAME (DE) (CAST)			TM-11491						
001				END FRAME (DE) ASSY.									

REV.	DATE	ALTERED	SDB	CHECKED	ABHIJIT	APPROVED	ABHIJIT	ZONE
17	24.07.19	IN SECTION-'AA' DIM. ø254.5 WAS ø255.5 (CLW LETTER REF. CLW/TM/18059/PART-I/1 DATED 12/07/19). NOTE 1 & 16 MODIFIED. NOTE 4 & 15 DELETED. NOTE 19 & 20 ADDED.						
16	18.10.18	NOTE-6 DELETED. NOTE-15 MODIFIED.						
15	25.05.18	IN SECTION-"CC" DIM. 3 TO 5 WAS NOT ON. NOTE-18 WAS NOT ON. IN SECTION-"AA" DIM. 110 (MAX.) MARKED IN CTQ (A/14).						
14	02.08.17	IN DETAIL-"Y" DIM. 45° WAS 15°.						
13	11.07.17	NOTES 16 & 17 ADDED. CTQ DIM.(18) AND PARALLEL (D/2) TOLERANCE ADDED AS PER SHOP FEEDBACK.						
12	03.06.17	IN TOOL LIST, DESCRIPTION OF TOOL NO. 1605061 MODIFIED.						
11	20.05.17	NOTE-9 MODIFIED & NOTES-13 TO 15 ADDED. MILLING CUT ADDED (F/4).						
10	28.04.17	DIM. 28.5±0.1 MARKED AS CTQ DIM.						
09	04.03.17	EMBOSSING/PUNCHING LOCATIONS ADDED.						
08	17.01.17	IN GAUGE LIST, GAUGE NO. 1605061 ADDED.						
07	06.10.16	TOOL NO. 1577826 DELETED & 1605055 ADDED.						
06	01.03.14	IN SECTION-'AA' DIM. ø320 -0.010 -0.050 WAS ø320 -0.067						
05	08.07.13	CRITICAL TO QUALITY DIMENSIONS ARE "⬠" MARKED & NUMBERED. NOTE-8, 9, 10, 11 & 12 ADDED.						
04	03.13	TOOL LIST & GAUGE LIST WERE NOT ON.						
03	22.11.12	DIM. ø305 +0.050 -0.000 & ø320 +0.000 -0.057 CHANGED TO ø305 +0.050 +0.025 & ø320 -0.010 -0.050 AS PER REQUIREMENT OF RDSO MODIFICATION SHEET NO. RDSO/2012/ELRS/MS/0415 DATED 03.10.12. DRG. DIGITIZED & UPLOADED.						
02	12.11	TM-11491 WAS ON 4TMS.096.068.						
01	22.12	DRG. DIGITIZED.						

SURFACE ROUGHNESS VALUE TO IS:3073	N1	N2	N3	N4	N5	N6	N7	N8	N9	N10	N11	N12
GRADE NUMBER / Ra µm	0.025	0.05	0.1	0.2	0.4	0.8	1.6	3.2	6.3	12.5	25	50
SYMBOL												

ADDITIONAL INFORMATION
QTWD.096.005, (ALT.06)
STATUS OF DRAWING

DISTRIBUTION OF PRINTS
TME-1, TXM-3, TNX-1

TYPE OF PRODUCT OR NAME OF CUSTOMER/PROJECT

TRACTION MOTOR 6FRA 6068

BHARAT HEAVY ELECTRICALS LTD. BHOPAL

	NAME	SIGN	DATE	NO. OF VAR.
DRN.	S.D.BHAGAT	–SD–	01/09/10	01
CHD.	D.K.	–SD–	01/09/10	
APPD.	A.S.	–SD–	01/09/10	

DEPT. TME | CODE 405 | UNTOL. DIMS. GR. | SCALE N.T.S. | WEIGHT (K.G.) | REF. TO ASSY. DRG. 0 445 10 64 051 | ITEM NO. | NO. OF ITEMS 006

TITLE: **END FRAME (DE) ASSY. (CNC MACHINED)**

DRAWING NO. 0 445 43 64 051 | REV. 17 | SHT. NO. 01 | NO. OF SHT. 01

SIZE A0

THE INFORMATION ON THIS DOCUMENT IS THE PROPERTY OF BHARAT HEAVY ELECTRICALS LIMITED. IT MUST NOT BE USED DIRECTLY OR INDIRECTLY IN ANY WAY DETRIMENTAL TO THE INTEREST OF THE COMPANY.

INVENTORY NO. | SIGN. & DATE | REF. DRG. NO.